Trex® Outdoor Furniture™

Assembly Instructions
Model: TXRST18

__(1) Bottom leg assembly
__(1) Top leg assembly
__(1) Table top

TOOLS NEEDED

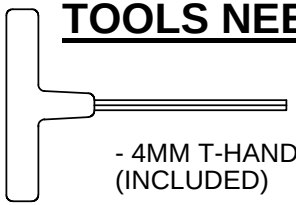

- 4MM T-HANDLE HEX KEY (INCLUDED)

- PHILLIPS SCREW DRIVER

Qty.	Description
4	A - .27 X 2 SOCKET WAFER "A"
1	B - 8 X 1-1/4 PHIL FLAT SCREW 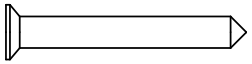

Step 1
Place the leg assemblies together on the table top.

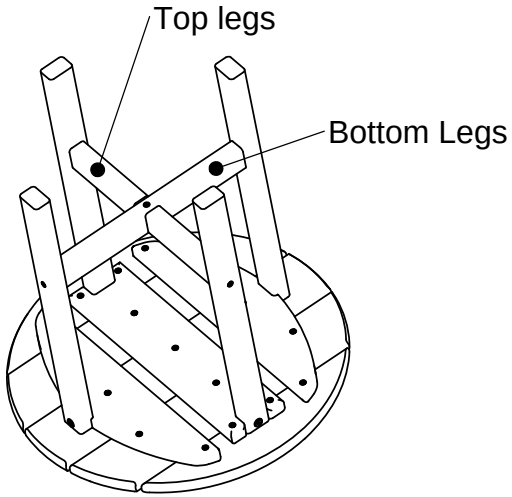

Step 2
Attach the legs using (4) 2" screws in pre-drillled holes.

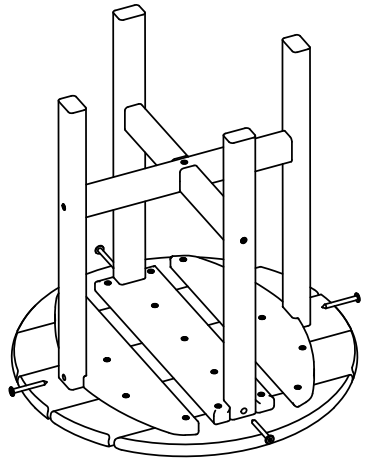

Step 3
Connect the braces using (1) 1¼ screw.

NOTE: There is not pilot hole, just a thru hole on the bottom brace

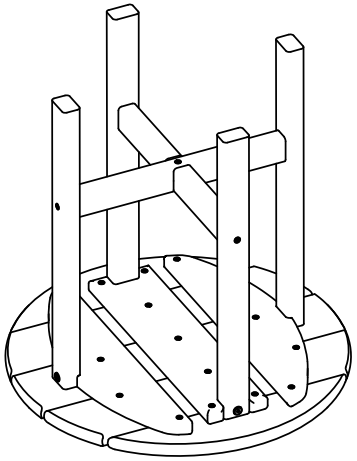

TREX® OUTDOOR FURNITURE™ 20-YEAR LIMITED WARRANTY

Poly-Wood, Inc., (hereinafter "Poly-Wood"), the licensee of Trex® Outdoor Furniture™, warranties to the original purchaser ("Purchaser") that, for a period of twenty (20) years of residential use and one (1) year for commercial use from the date of original purchase, under normal use and service conditions, Trex Outdoor Furniture brand high-density polyethylene (HDPE) products shall be free from material defects, and shall not splinter, crack, chip, peel, rot, or suffer structural damage from insect infestation. Further, Poly-Wood warranties that for a period of 30-days from date of purchase all Trex Outdoor Furniture products shall be free from defects related to workmanship.

Aluminum Frames:

- Welds and Joints are warranted to not break or crack for 5 years of residential use, 1 year of commercial use
- Powder Coat Finish is warranted to not peel for 5 years of residential use, 1 year of commercial use

Hardware:

- Hardware used in production or assembly of Poly-Wood products are warranted to not break for 5 years of residential use, 1 year of commercial use

Cushions:

- Cushions are warranted to be free from workmanship or material defects for 30-days from purchase. This warranty does not apply to normal wear and tear effects on the cushions, which are received by regular use of the cushions. Neither does it cover damage due to unauthorized repairs or alterations, negligence, misuse or abuse, improper assembly and acts of God

Umbrellas:

- Umbrellas are not covered under the Trex Outdoor Furniture warranty

The following items are specifically excluded from the Trex Outdoor Furniture limited warranty. Poly-Wood shall not be liable for any failure, defect or damage resulting from or connected with the following:

- Fading, color change, or color match – Trex Outdoor Furniture HDPE products are made with UV-stabilizers to minimize fading, however upon exposure to the sun all colors will fade to some degree. To minimize possible fading cover your furniture or use a UV-protectant such as Armor All®
- Rust or corrosion of stainless steel hardware – please see Cleaning/Maintenance information for details on how to maintain your hardware
- Assembly or handling of products after they leave our factory, including any lack of performance or improper performance in any way by the dealer or assembler
- Abnormal use of the products
- The application of paint, varnish or other coating or chemical not approved by Poly-Wood or the application of heat or radiation from an external source such as a barbecue grill, another appliance, fire or reflection from windows or doors
- Any lack of compatibility between our products and any other product not manufactured by us that causes damage to or failure of our products
- Labor, transportation or assembly costs
- Color or pattern variance between any new replacement section or pieces and other sections or pieces. (We reserve the right to discontinue or modify any product line or color without notifying the original purchaser. If the original product is not available, we retain the right to choose to provide replacement material of equal value or quality.)
- Damage caused by, among other things, use of incompatible accessories, intentional acts, unreasonable use, misuse, physical abuse, vandalism, riot, insurrection or civil disorder, accidents or corrosive atmospheres (such as those contaminated by acid rain, harmful chemicals or vapors), or any act of God (such as fire, flooding, hurricane, earthquake, tornado, lightning, ice, etc.), environmental condition (such as air pollution, mold, mildew, etc.), staining from foreign substances (such as dirt, grease, oil, etc.), or normal weathering (defined as exposure to sunlight, weather and atmosphere which may cause any colored surface to gradually fade, darken, chalk, or accumulate dirt or stains);
- Assembly of hardware, accessory items or defects caused by their assembly

Proper maintenance of your product is required to support the benefits of this warranty. This warranty is voided in the event that there are indications of abuse or neglect to the furniture. This warranty does not apply to normal wear and tear effects on the furniture, which are received by regular use of the furniture.

For service under this warranty contact the Trex Outdoor Furniture retailer from whom you purchased the product. When submitting a claim, you will be required to submit the written description of the defect, proof of purchase receipt including the date, and may be asked for photographs of the product to submit to Poly-Wood. Warranty claims may be submitted by email to your sales rep or by fax to (574) 457-4723. Once documentation has been received and evaluated, Poly-Wood's sole responsibility shall be, at its option, to repair or replace defective component, to repair or replace defective furniture, or authorize repairs by a third party, and the Purchaser will be notified of the solution. Should defective product no longer be available Poly-Wood may replace with similar product of our choosing. All returns require a Return Merchandise Authorization prior to being returned. Poly-Wood will provide a one-attempt call tag for those items it requires be returned under our warranty. Failure to return product via Poly-Wood's call tag will transfer responsibility to return product to purchaser at their own cost. If product is not returned within 30 days of Return Authorization, Purchaser is responsible for all shipping charges that may apply. All returns must have the RMA # clearly visible on outside of shipping box. Failure to return requested defective product will result in forfeiture of any credit.

Under the Trex Outdoor Furniture warranty, replacement of defective product will require the purchaser to pay for the replacement. Once the defective product is returned to Poly-Wood and evaluation confirms it is defective, credit will be issued to the purchaser. Should purchaser return defective product to Poly-Wood prior to shipment of replacement, any credit would be applied to replacement product.

No person or entity is authorized by Poly-Wood to make and Poly-Wood shall not be bound by any statement or representation as to the quality or performance of Poly-Wood products other than as contained in this warranty. This warranty may not be altered or amended except in a written instrument signed by Poly-Wood and Purchaser.

UNDER NO CIRCUMSTANCES WILL POLY-WOOD BE LIABLE FOR SPECIAL, INCIDENTAL OR CONSEQUENTIAL DAMAGES, WHETHER SUCH DAMAGES ARE SOUGHT IN CONTRACT, IN TORT (INCLUDING BUT NOT LIMITED TO NEGLIGENCE AND STRICT LIABILITY) OR OTHERWISE, AND POLY-WOOD'S LIABILITY WITH RESPECT TO DEFECTIVE PRODUCTS SHALL IN NO EVENT EXCEED THE REPLACEMENT OF SUCH PRODUCTS OR RETURN OF THE PURCHASE PRICE, AS DESCRIBED ABOVE.

Some states do not allow the exclusions or limitations of incidental or consequential damages, so the above limitations or exclusions may not apply to you. This warranty gives you specific legal rights, and you may also have other rights that vary from state to state.

This warranty shall only be applicable and enforceable in the United States of America and Canada.

This warranty is effective for products purchased on or after 4/1/2012.