Premier Copper Products

ITEM # K40DB33229
33" KITCHEN 40/60 DOUBLE BOWL SINK

OUTER DIMENSIONS: 33"X22"X9"
INNER DIMENSIONS: L:11.5"X16"X7" R:16.5"X18"X9"
DRAIN SIZE: 3.5" STANDARD
MATERIAL GAUGE: 14

CODE/STANDARD COMPLIANCE
* IAPMO/cUPC LISTED

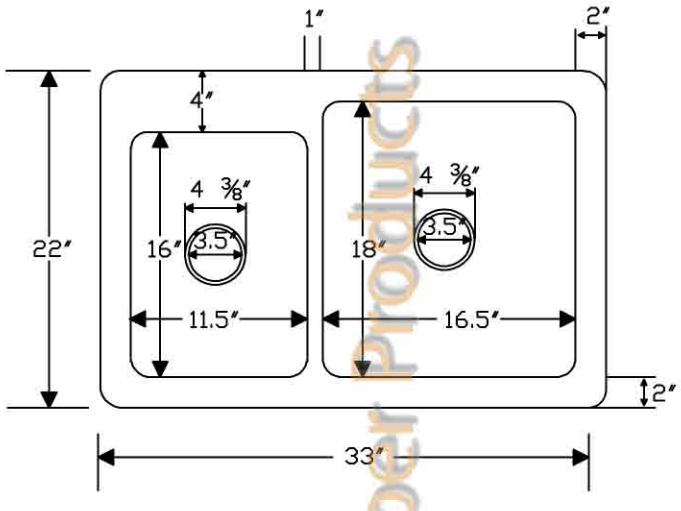

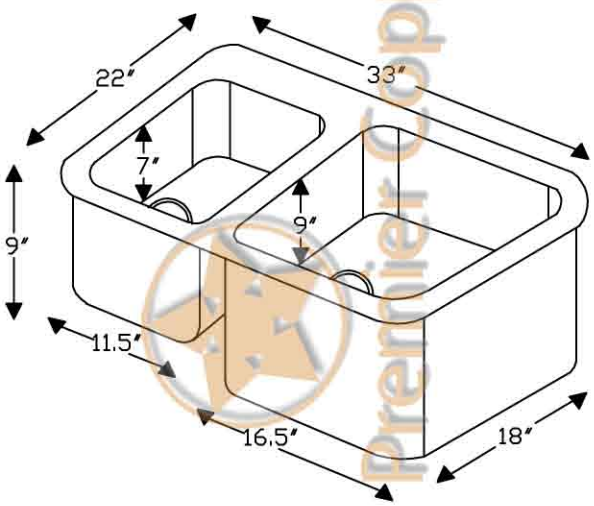

Premier Copper Products

IMPORTANT: THIS PRODUCT IS HAND CRAFTED AND SMALL VARIANCES MAY OCCUR. DIMENSIONS MAY VARY UP TO 1/4". DO NOT MAKE ANY INSTALLATION CUTS UNTIL YOU RECEIVE YOUR SINK.

TRÜ Faucets
BY PREMIER COPPER PRODUCTS

K-PD01ORB

SINGLE HANDLE PULL-DOWN KITCHEN FAUCET

FEATURES:

- All Brass Material
- Ceramic Cartridges
- Max Flow Rate: 2.2GPM(8.3LPM) @ 60PSI
- 100% Factory Tested
- Strainer Available

APPLICABLE STANDARDS/CODES:

- ASME A112.18.1
- CSA B125.1-2005
- NSF/ANSI 61-2007a
- California Lead Plumbing Law
- ADA

FINISHES:

- Oil Rubbed Bronze (ORB)
- Brushed Nickel (BN)

SPECIFIED MODEL:

Model	Description	Finish
K-PD01ORB	Single Handle Pull-Down Kitchen Faucet	ORB
K-PD01ORB-D	Single Handle Pull-Down Kitchen Faucet W/ Strainer	ORB
K-PD01ORB-G	Single Handle Pull-Down Kitchen Faucet W/ Garbage Disposal Drain	ORB
K-PD01ORB-DG	Single Handle Pull-Down Kitchen Faucet W/ Disposal-Basket Drains	ORB
K-PD01ORB-DD	Single Handle Pull-Down Kitchen Faucet W/ (2) Basket Drains	ORB

TRÜ™ Faucets

BY PREMIER COPPER PRODUCTS

K-PD01ORB

PRODUCT SPECIFICATIONS

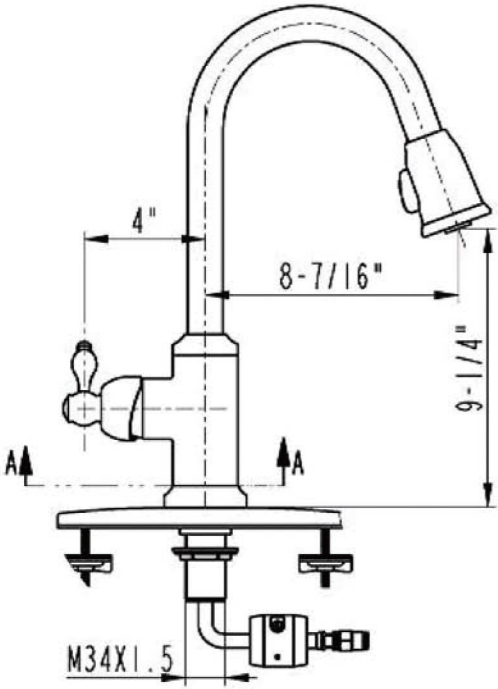

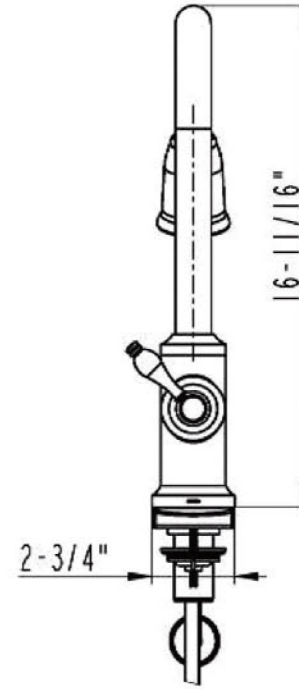

TRÜ™ Faucets

BY PREMIER COPPER PRODUCTS

K-PD01ORB

EXPLODED PARTS VIEW

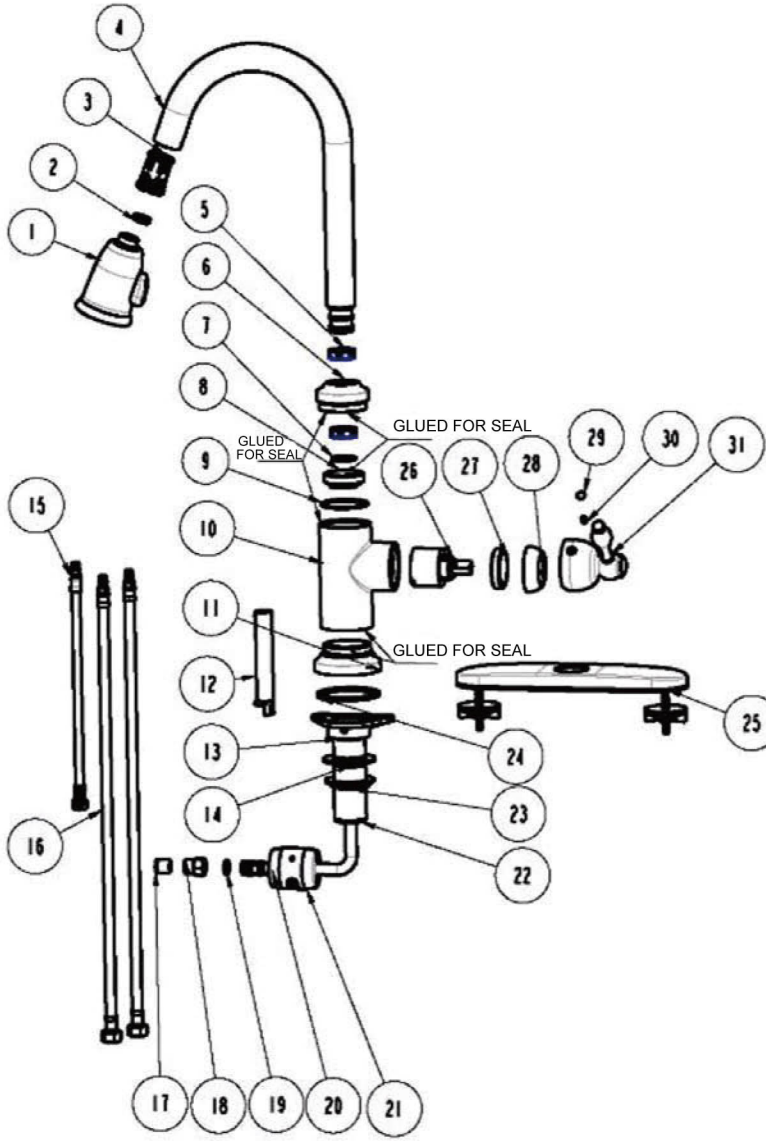

TRÜ Faucets

BY PREMIER COPPER PRODUCTS

K-PD01ORB

PARTS LISTING

NO.	Part NO.	Part Name
31	2750377	HANDEL ASSEMBLY
30	2090049	HEXAGONAL MOUNTING SCREW
29	2100093	MARK
28	2110104	CARTRIDGE CAP
27	2110114	RETAINER NUT
26	2710045	40 CARTRIDGE
25	2110169	DECK PLATE
24	2050414	WASHER
23	2120033	MOUNTING NUT
22	2030026	SCREW CONNECTER
21	2000084	ADDITIONAL WEIGHT BLOCK
20	2860314	STAINLESS STEEL HOSE
19	2050171	WASHER
18	2040171	CONNECTER
17	2730006	CHECK VALVE
16	2860148	STAINLESS STEEL FLEXIBLE HOSE
15	2860210	STAINLESS STEEL FLEXIBLE HOSE
14	2180150	WASHER
13	2160081	MOUNTING BASE
12	2150146	HOSE SHELL
11	2160352	BASE SET
10	2132679	BODY
9	2050128	O-RING
8	2120165	MOUNTING NUT
7	2050123	O-RING
6	2110504	PRESS CAP
5	2180337	C-RING
4	2140502	SPOUT PIPE
3	2150147	SHELL
2	2050344	WASHER
1	2800033	SPRAY

Premier Copper Products

ITEM # D-1300RB
3.5" GARBAGE DISPOSAL DRAIN W/ BASKET

COLOR: OIL RUBBED BRONZE
SIZE: 3.5"

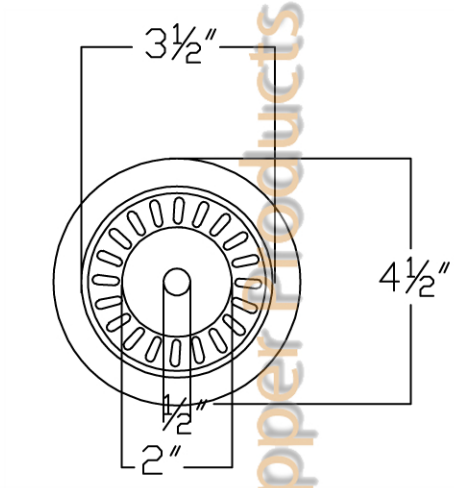

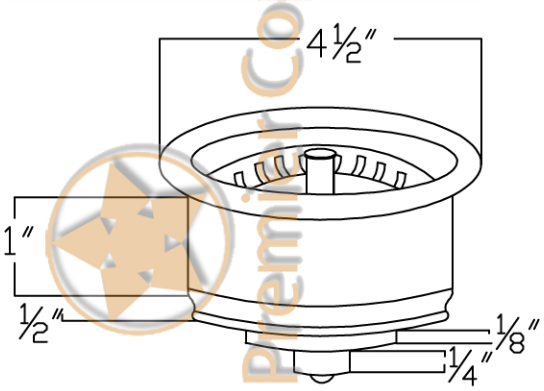

Premier Copper Products

Premier Copper Products

ITEM # D-1320RB
3.5" KITCHEN/BAR/PREP BASKET STRAINER DRAIN

COLOR: OIL RUBBED BRONZE
SIZE: 3.5"

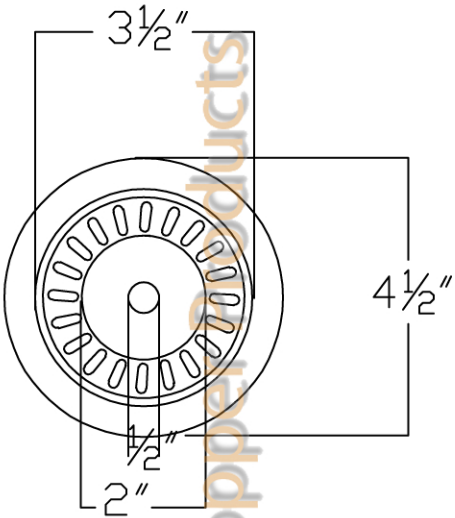

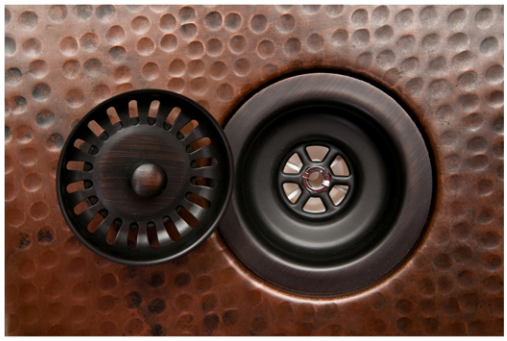

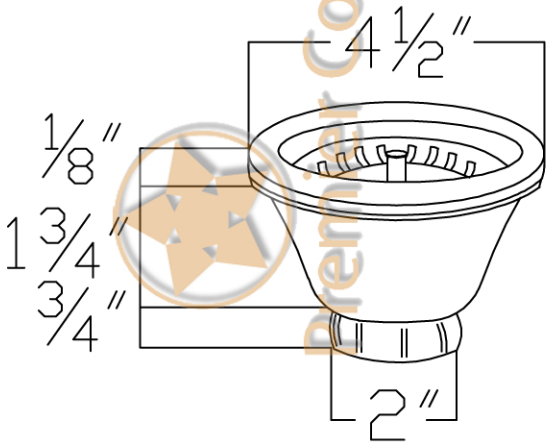

Premier Copper Products

Premier Copper Products

ITEM # PCP-7010RB
SOAP & LOTION DISPENSER
IN OIL RUBBED BRONZE

* SOLID BRASS DISPENSER
* EASY ABOVE COUNTER REFILL
* 4" SPOUT REACH
*500ML BOTTLE

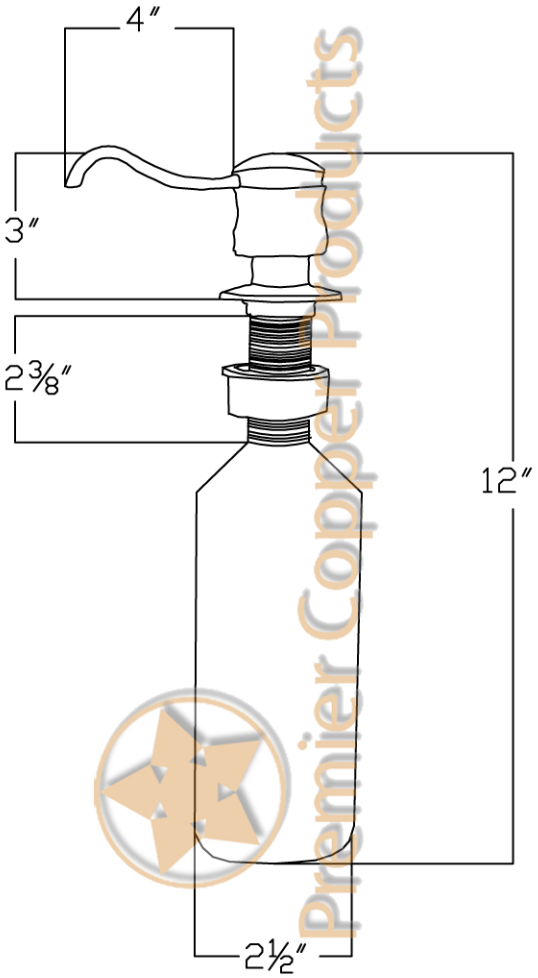

Premier Copper Products

PREMIER
COPPER PRODUCTS

ITEM # C900-ORB
OIL RUBBED BRONZE
INSTALLATION SILICONE

SIZE: 4.7oz

COLOR: OIL RUBBED BRONZE

PERFECT FOR INSTALLING COPPER SINKS AND ORB DRAINS!

Premier Copper Products

ITEM # W900-WAX
COPPER SINK WAX & CLEANER
SIZE: 20 OZ

Cleans - Protects- Preserves - Restores Lustre

Protects Surfaces with Natural Bee's Wax

No Wax Buildup..Ever - Needs No Buffing

Perfect For

Copper Sinks	Fine Furniture	Glass	Granite
Marble	Faucets	Mirrors	Chrome
Door Knobs	Kitchen Cabinets	Aluminum	Appliances
Shower Glass	Wrought Iron	Countertops	Leather

Directions

SHAKE WELL BEFORE USING

Spray surfaces lightly and wipe immediately with grain. Do not allow product to dry before wiping.

Helpful Hints

Before application make sure surface is cleaned and completely dry. Use a Clean Paper Towel for Best Results. Apply as often as needed. Product will not leave a wax buildup.

CAUTION: Contents under pressure. Do not use or store near heat or expose to temperatures above 120° F. Do not puncture or incinerate can. Contains petroleum distillate. Keep out of reach of children.

HMIS RATINGS:
Health 1, Flammability 1, Reactivity 1, Personal A

PREMIER
BEE'S WAX SURFACE PROTECTANT

NO FINGERPRINTS

NO WAX BUILDUP EVER!

Makes Copper Sinks and Granite Tops Acid Resistant

Won't Fingerprint Stainless Steel

Prevents Bathroom Mirrors from Fogging

Hard Water Protection

CAUTION

CONTENTS UNDER PRESSURE
KEEP OUT OF REACH OF CHILDREN
See Additonal Cuations on Back Panel

NET WT. 17 OZ. (482g)

Premier Copper Products