Craft Grower Kit Assembly Instructions

Parts

1. 2 Trellis Panels
2. 2 L Pieces w/bracket
3. 2 screws/nuts for bracket
4. 8 screws/washers/nuts for Trellis
5. 2 Coco Fiber Troughs
6. 2 Curve pieces
7. 1 Grid Shelf
8. 2 Short Shelf Hooks
9. 2 Long Shelf Hooks

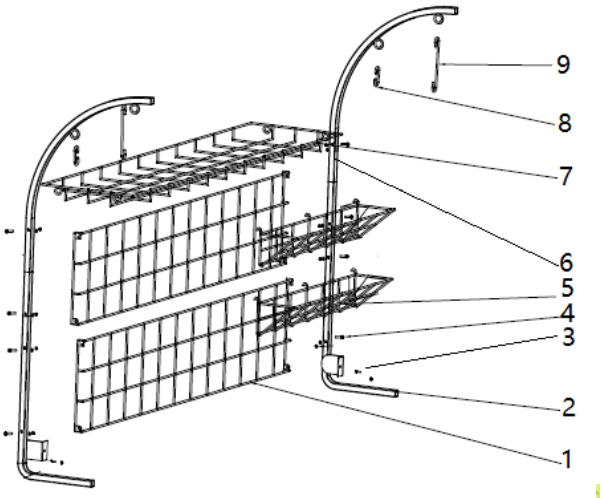

1, Remove 2 top screws from back side/far side of assembled LGarden and remove 2 square plastic plugs from back side/far side of assembled LGarden

2, Insert L Pieces into holes left from square plugs with bracket facing center of LGarden

3, Attach L piece bracket to back side of LGarden with shorter screws.

4, Insert Curved Pieces into L Pieces

5, Attach Trellis to L Pieces and Curved Pieces with 8 screws/washers/nuts

6, Attach Shelf Hooks to top of Curved Pieces with the 2 shorter hooks in back and the 2 longer hooks in front