REVISIONS				
ZONE	REV.	DESCRIPTION	DATE	APPROVED

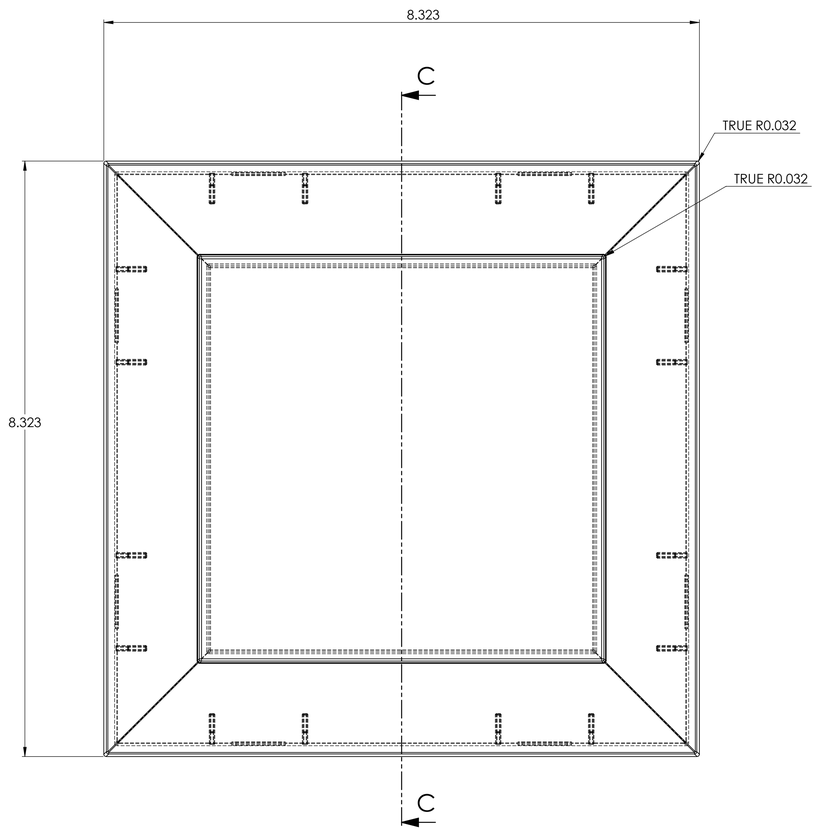

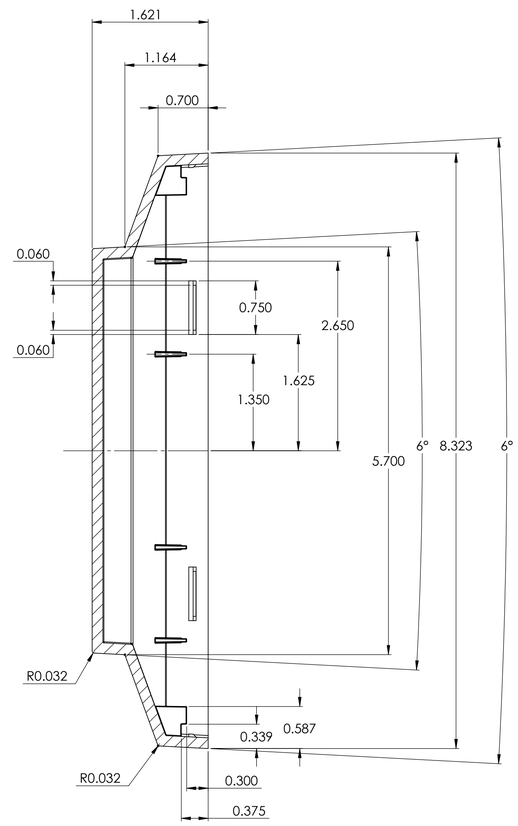

SECTION C-C

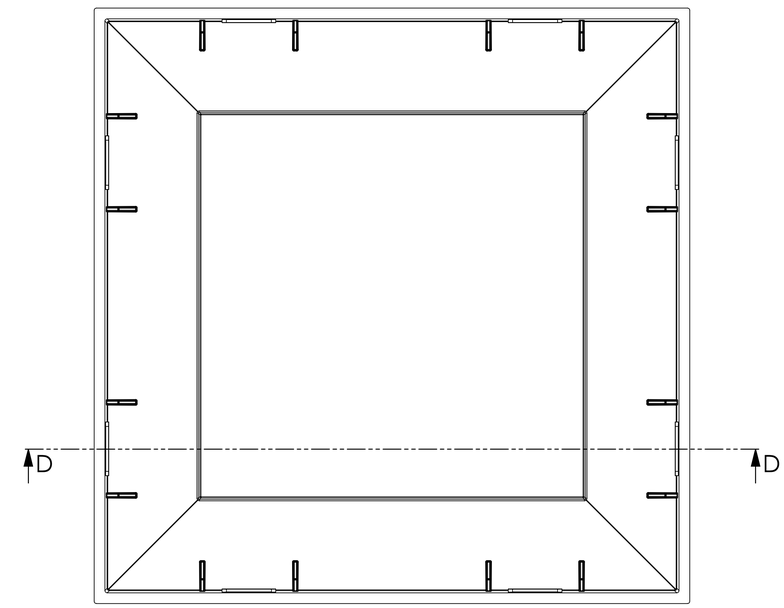

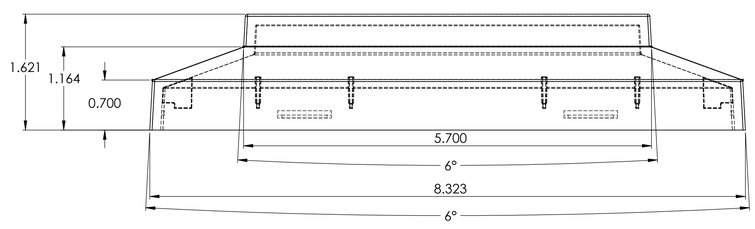

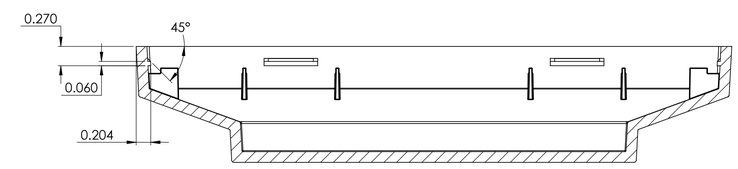

SECTION D-D

TOLERANCES UNLESS SPECIFIED FRACTIONAL ± 1/64 ANGULAR ± 1/2° .XX ± .02 .XXX ± .005 .XXXX ± .001		AZEK Rail		REV A
		SHEET DESCRIPTION: AZEK 5.500 ISLAND CAP LID		THIRD ANGLE PROJECTION
DESIGN: F.LOFTUS	10/1/13	CUSTOMER: AZEK PART NUMBER:		
APPROVED:	MM/DD/YY			
RELEASE DATE: MM/DD/YY		SCALE: 1=1	MATERIAL: PVC	SHRINKAGE: N/A	SHEET 1 OF 1